IF2140 – Pemodelan Basis Data / IF2240 – Basis Data

SQL (Part 2)

©2020 - Tim Pengajar IF2140 Semester I TA 2020/2021

KNOWLEDGE & SOFTWARE ENGINEERING

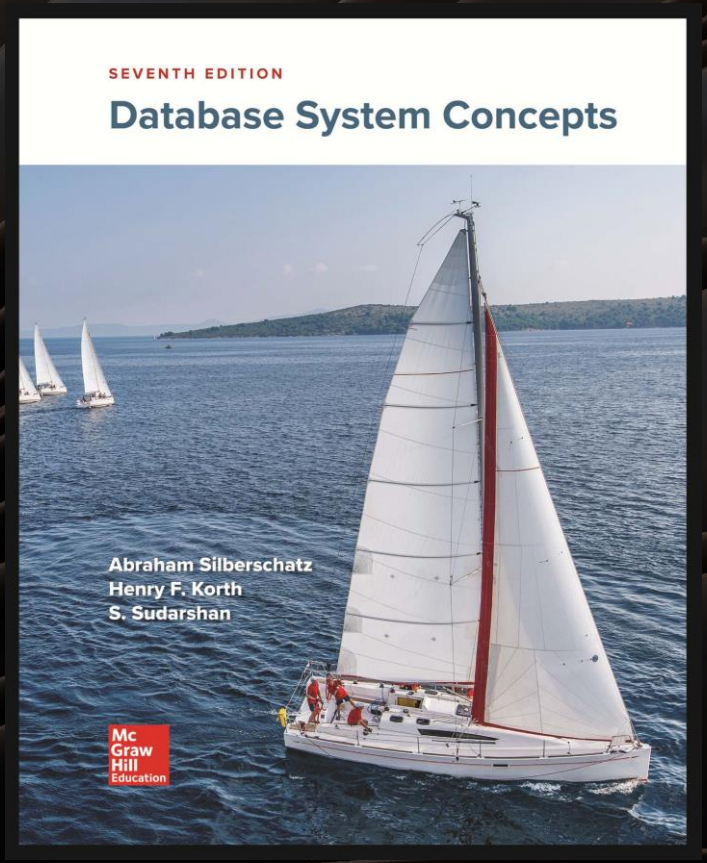

Sumber

Silberschatz, Korth, Sudarshan: "Database System Concepts", 7th Edition

- Chapter 3 : Introduction to SQL
- Chapter 4 : Intermediate SQL

©2022 - Tim Pengajar IF2140 Pemodelan Basis Data

Schema Diagram

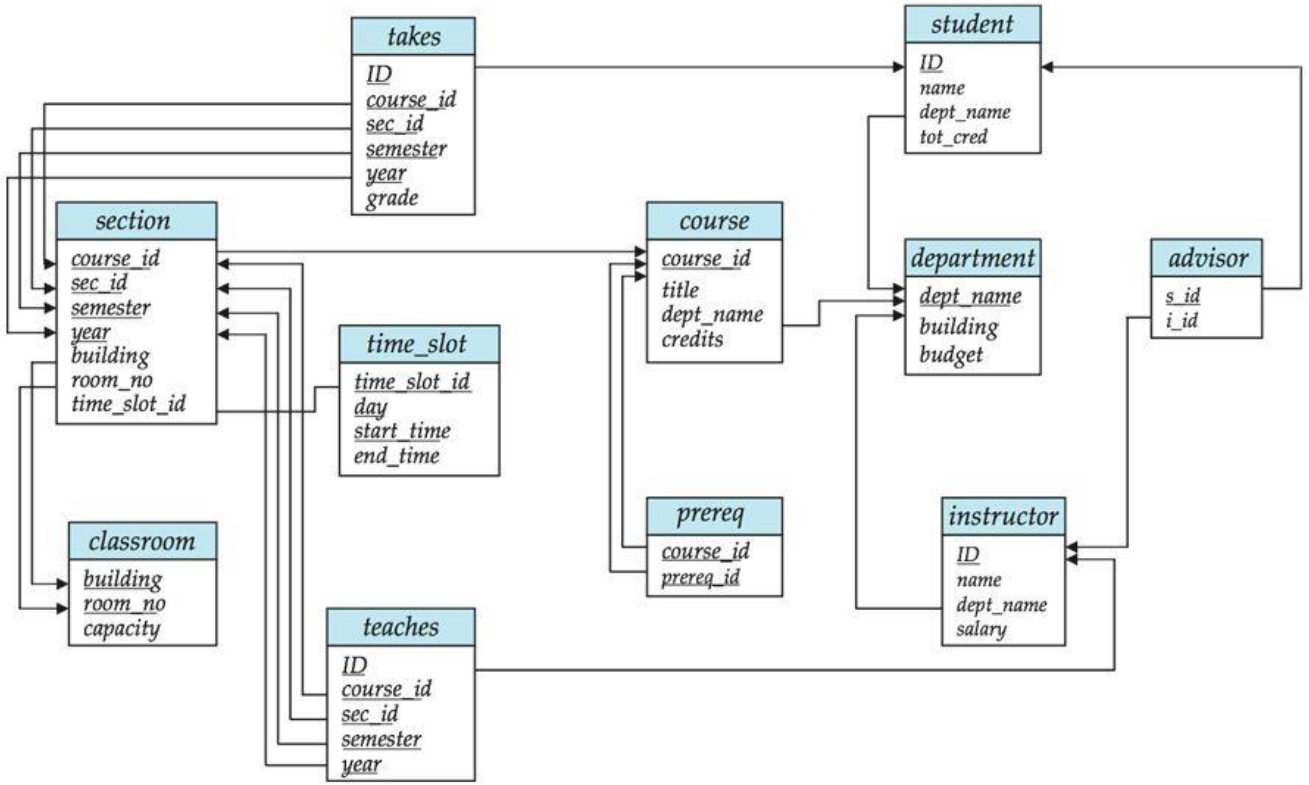

Nested Subqueries

SQL provides a mechanism for the nesting of subqueries. A **subquery** is a **select-from-where** expression that is nested within another query.

The nesting can be done in the following SQL query

select $A_1, A_2, \ldots, A_n$
from $r_1, r_2, \ldots, r_m$
where P

as follows:

- **From clause:** r_i can be replaced by any valid subquery
- **Where clause:** P can be replaced with an expression of the form:

  B <operation> (subquery)

  B is an attribute and <operation> to be defined later.
- **Select clause:**

  A_i can be replaced be a subquery that generates a single value.

©2022 - Tim Pengajar IF2140 Pemodelan Basis Data
KNOWLEDGE & SOFTWARE ENGINEERING

Set Membership

Find courses offered in Fall 2017 and in Spring 2018

```
select distinct course_id
from section
where semester = 'Fall' and year= 2017 and
        course_id in (select course_id
                      from section
                      where semester = 'Spring' and year= 2018);
```

Find courses offered in Fall 2017 but not in Spring 2018

```
select distinct course_id
from section
where semester = 'Fall' and year= 2017 and
        course_id  not in (select course_id
                           from section
                           where semester = 'Spring' and year= 2018);
```


©2022 - Tim Pengajar IF2140 Pemodelan Basis Data

Set Membership (Cont.)

Name all instructors whose name is neither "Mozart" nor Einstein"

```
select distinct name
from instructor
where  name not in ('Mozart', 'Einstein')
```

Find the total number of (distinct) students who have taken course sections taught by the instructor with *ID* 10101

```
select count (distinct ID)
from takes
where (course_id, sec_id, semester, year) in
                    (select course_id, sec_id, semester, year
                     from teaches
                     where teaches.ID= 10101);
```

Note: Above query can be written in a much simpler manner.
The formulation above is simply to illustrate SQL features

©2022 - Tim Pengajar IF2140 Pemodelan Basis Data
KNOWLEDGE & SOFTWARE ENGINEERING

Set Comparison – "some" Clause

Find names of instructors with salary greater than that of some (at least one) instructor in the Biology department.

```
select distinct T.name
from instructor as T, instructor as S
where T.salary > S.salary and S.dept name = 'Biology';
```

Same query using > **some** clause

```
select name
from instructor
where salary > some (select salary
                     from instructor
                     where dept name = 'Biology');
```


©2022 - Tim Pengajar IF2140 Pemodelan Basis Data
KNOWLEDGE & SOFTWARE ENGINEERING

Definition of "some" Clause

F <comp> **some** $r \Leftrightarrow \exists\, t \in r$ such that (F <comp> t)
Where <comp> can be: $<$, $\leq$, $>$, $=$, $\neq$

(5 < **some** $\boxed{0 \mid 5 \mid 6}$) = true (read: 5 < some tuple in the relation)

(5 < **some** $\boxed{0 \mid 5}$) = false

(5 = **some** $\boxed{0 \mid 5}$) = true

(5 ≠ **some** $\boxed{0 \mid 5}$) = true (since 0 ≠ 5)

(= **some**) ≡ **in**
However, (≠ **some**) ≡ **not in**

©2022 - Tim Pengajar IF2140 Pemodelan Basis Data
KNOWLEDGE & SOFTWARE ENGINEERING

Set Comparison – "all" Clause

Find the names of all instructors whose salary is greater than the salary of all instructors in the Biology department.

```
select name
from instructor
where salary > all (select salary
                    from instructor
                    where dept name = 'Biology');
```


©2022 - Tim Pengajar IF2140 Pemodelan Basis Data
KNOWLEDGE & SOFTWARE ENGINEERING

Definition of "all" Clause

F <comp> **all** $r \Leftrightarrow \forall\ t \in r$ (F <comp> t)

(5 < **all** $\boxed{0 \mid 5 \mid 6}$) = false

(5 < **all** $\boxed{6 \mid 10}$) = true

(5 = **all** $\boxed{4 \mid 5}$) = false

(5 ≠ **all** $\boxed{4 \mid 6}$) = true (since 5 ≠ 4 and 5 ≠ 6)

(≠ **all**) ≡ **not in**
However, (= **all**) ≢ **in**

©2022 - Tim Pengajar IF2140 Pemodelan Basis Data

Test for Empty Relations

The **exists** construct returns the value **true** if the argument subquery is nonempty.

exists $r \Leftrightarrow r \neq \emptyset$

not exists $r \Leftrightarrow r = \emptyset$

©2022 - Tim Pengajar IF2140 Pemodelan Basis Data
KNOWLEDGE & SOFTWARE ENGINEERING

Use of "exists" Clause

Yet another way of specifying the query "Find all courses taught in both the Fall 2017 semester and in the Spring 2018 semester"

```
select course_id
from section as S
where semester = 'Fall' and year = 2017 and
        exists (select *
                from section as T
                where semester = 'Spring' and year= 2018
                        and S.course_id = T.course_id);
```

Correlation name – variable S in the outer query

Correlated subquery – the inner query

©2022 - Tim Pengajar IF2140 Pemodelan Basis Data
KNOWLEDGE & SOFTWARE ENGINEERING

Use of "not exists" Clause

Find all students who have taken all courses offered in the Biology department.

```
select distinct S.ID, S.name
from student as S
where not exists ( (select course_id
                    from course
                    where dept_name = 'Biology')
                   except
                    (select T.course_id
                     from takes as T
                     where S.ID = T.ID));
```

- First nested query lists all courses offered in Biology
- Second nested query lists all courses a particular student took

Note that $X - Y = \emptyset \quad \Leftrightarrow \quad X \subseteq Y$

Note: Cannot write this query using = all and its variants

©2022 - Tim Pengajar IF2140 Pemodelan Basis Data

Test for Absence of Duplicate Tuples

The **unique** construct tests whether a subquery has any duplicate tuples in its result.

The **unique** construct evaluates to "true" if a given subquery contains no duplicates .

Find all courses that were offered at most once in 2017

```
 select T.course_id
from course as T
where unique ( select R.course_id
                 from section as R
                 where T.course_id= R.course_id
                        and R.year = 2017);
```


©2022 - Tim Pengajar IF2140 Pemodelan Basis Data
KNOWLEDGE & SOFTWARE ENGINEERING

Subqueries in the From Clause

SQL allows a subquery expression to be used in the **from** clause

Find the average instructors' salaries of those departments where the average salary is greater than $42,000."

```
select dept_name, avg_salary
from ( select dept_name, avg (salary) as avg_salary
         from instructor
         group by dept_name)
where avg_salary > 42000;
```

Note that we do not need to use the **having** clause

Another way to write above query

```
select dept_name, avg_salary
from ( select dept_name, avg (salary)
         from instructor
         group by dept_name)
          as dept_avg (dept_name, avg_salary)
 where avg_salary > 42000;
```


©2022 - Tim Pengajar IF2140 Pemodelan Basis Data
KNOWLEDGE & SOFTWARE ENGINEERING

With Clause

The **with** clause provides a way of defining a temporary relation whose definition is available only to the query in which the **with** clause occurs.

Find all departments with the maximum budget

```
with max_budget (value) as
        (select max(budget)
         from department)
select department.name
from department, max_budget
where department.budget = max_budget.value;
```


©2022 - Tim Pengajar IF2140 Pemodelan Basis Data
KNOWLEDGE & SOFTWARE ENGINEERING

Complex Queries using With Clause

Find all departments where the total salary is greater than the average of the total salary at all departments

```
with dept _total (dept_name, value) as
        (select dept_name, sum(salary)
         from instructor
         group by dept_name),
dept_total_avg(value) as
       (select avg(value)
       from dept_total)
select dept_name
from dept_total, dept_total_avg
where dept_total.value > dept_total_avg.value;
```


©2022 - Tim Pengajar IF2140 Pemodelan Basis Data
KNOWLEDGE & SOFTWARE ENGINEERING

Scalar Subquery

Scalar subquery is one which is used where a single value is expected

List all departments along with the number of instructors in each department

```
select dept_name,
        ( select count(*)
          from instructor
          where department.dept_name = instructor.dept_name)
        as num_instructors
from department;
```

Runtime error if subquery returns more than one result tuple

©2022 - Tim Pengajar IF2140 Pemodelan Basis Data